# BLAIR BLANCHARD STAPLETON

LIMITED, REAL ESTATE BROKERAGE

## OFFICE SPACE FOR LEASE

BBSREALTY.COM

**$21.95 PSF**
NET LEASE RATE

**$10.75 PSF**
T.M.I. (2025)

**2,007**
SQUARE FEET

## 63 King Street West, Dundas ON

Locate your business in the heart of Downtown Dundas at 63 King Street West! This historic unit is conveniently located just steps away from the corner of King & Sydenham Street, being pedestrian friendly, while also accompanied by 2-3 parking spots behind the unit, a rare offering for Dundas.


### Andrew Patrick Blair

**Broker**

Office: 905.529.5900 Ext. 225
Email: blaird@bbsrealty.com

### Alexandra Blair

**Sales Representative**

Office: 905.529.5900 Ext. 213
Email: alexandrablair@bbsrealty.com


BLAIR BLANCHARD STAPLETON 30 YEARS IN BUSINESS


**HAMILTON OFFICE**
1425 Cormorant Road, Suite 303, Ancaster, ON L9G 4V5
P 905.529.5900 F 905.529.7474



The information contained herein is provided by the building owner or their agents or representatives and although such information has been obtained from sources considered to be reliable, Blair Blanchard Stapleton Limited makes no representation or warranty as to the accuracy or completeness thereof. The information contained herein is subject to change without notice.

# OFFICE SPACE FOR LEASE

The space has plenty of natural light, high ceilings, a welcoming reception, & large flexible spaces. Become part of the Dundas business community today! Pay parking lots available a short walk away, as well as pay street parking out front of unit.

BBSREALTY.COM

## PROPERTY DETAILS

| | |
|---|---|
| CEILING HEIGHT | 10 ft |
| LEVELS | 2 |
| PARKING | 2-3 spots |
| POSESSION | 60-89 days |
| ZONING | C5a Exception 570 |

- Located in the heart of Downtown Dundas
- 2-3 parking spots located behind the unit
- Plenty of natural light, high ceilings, a welcoming reception & large flexible spaces
- Pay parking lots available a short walk away
- Pay street parking out front of unit

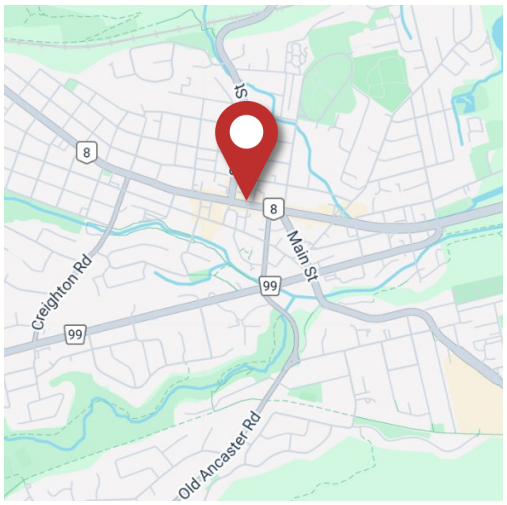

**HAMILTON OFFICE**
1425 Cormorant Road, Suite 303, Ancaster, ON L9G 4V5
P 905.529.5900 F 905.529.7474

The information contained herein is provided by the building owner or their agents or representatives and although such information has been obtained from sources considered to be reliable, Blair Blanchard Stapleton Limited makes no representation or warranty as to the accuracy or completeness thereof. The information contained herein is subject to change without notice.

# FLOOR PLAN - GROUND FLOOR

BBSREALTY.COM

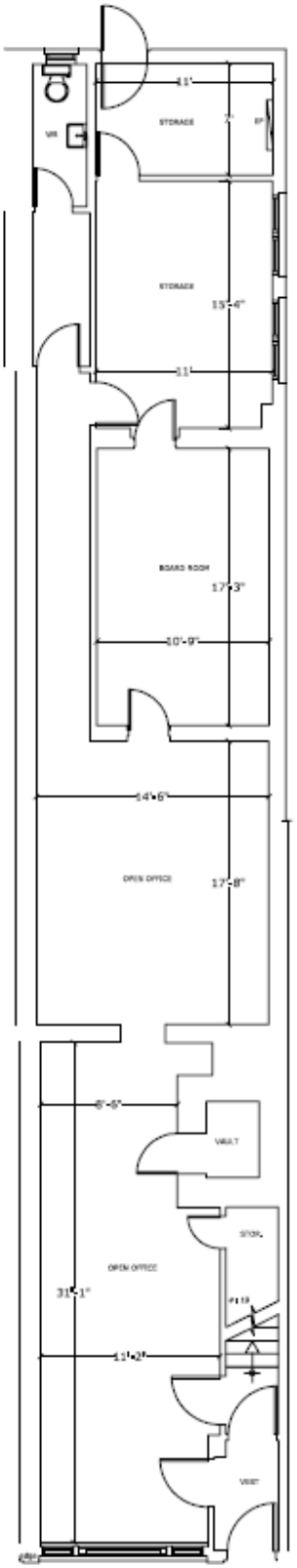


**HAMILTON OFFICE**
1425 Cormorant Road, Suite 303, Ancaster, ON L9G 4V5
P 905.529.5900 F 905.529.7474

The information contained herein is provided by the building owner or their agents or representatives and although such information has been obtained from sources considered to be reliable, Blair Blanchard Stapleton Limited makes no representation or warranty as to the accuracy or completeness thereof. The information contained herein is subject to change without notice.

# FLOOR PLAN - SECOND FLOOR

BBSREALTY.COM

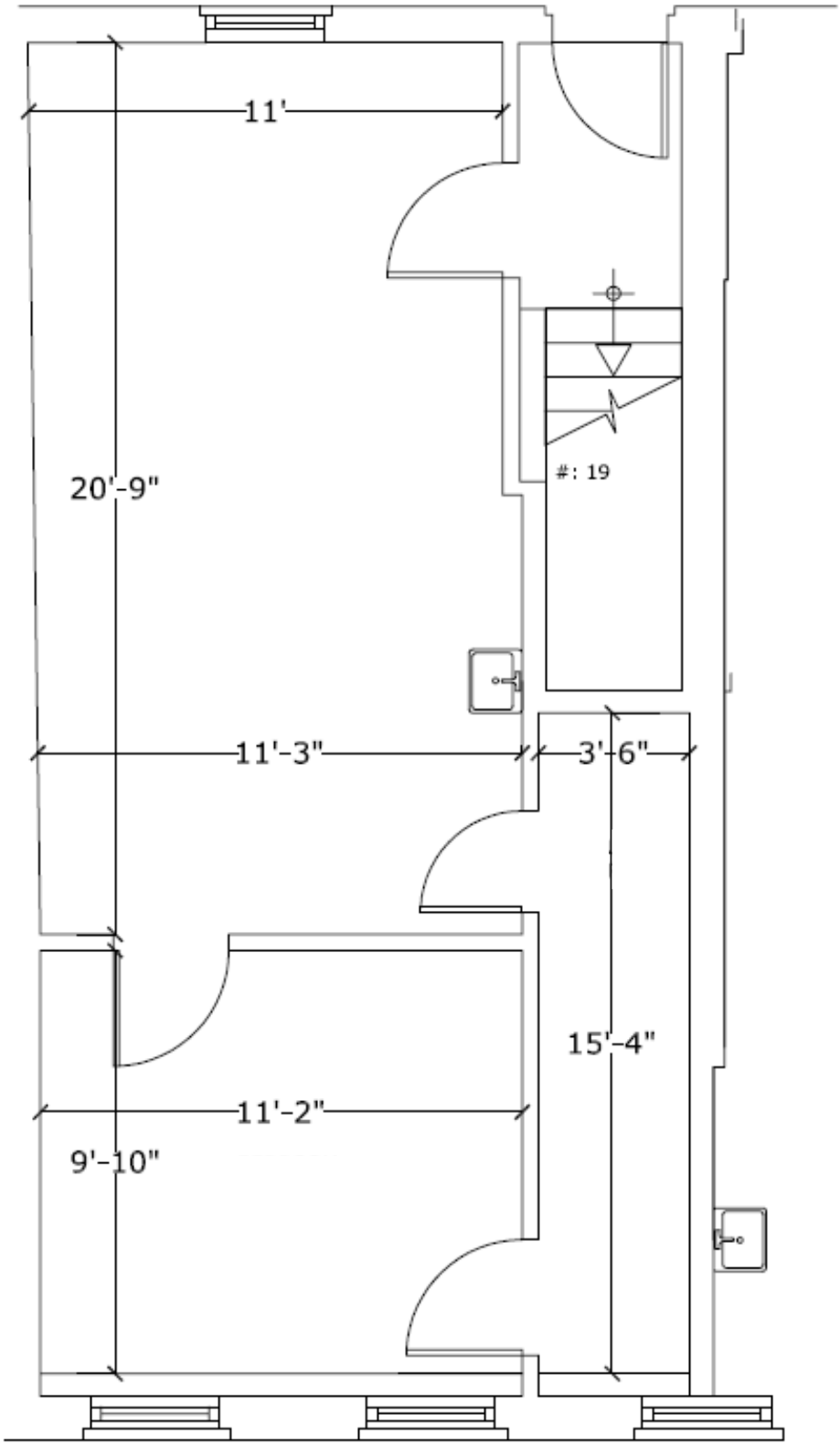



**HAMILTON OFFICE**

1425 Cormorant Road, Suite 303, Ancaster, ON L9G 4V5

P 905.529.5900 F 905.529.7474



The information contained herein is provided by the building owner or their agents or representatives and although such information has been obtained from sources considered to be reliable, Blair Blanchard Stapleton Limited makes no representation or warranty as to the accuracy or completeness thereof. The information contained herein is subject to change without notice.